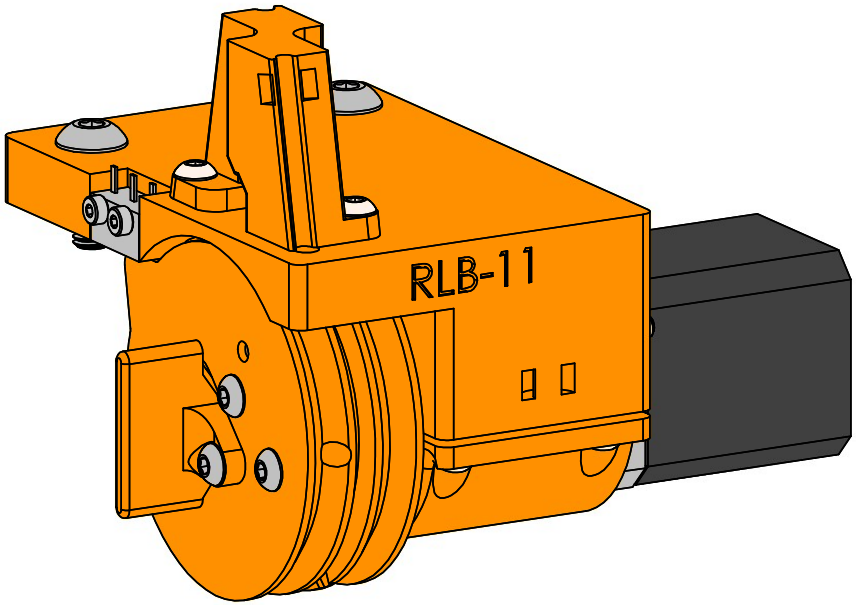

Remote Elastic Lock Assembly		
CC BY	Created by: Joshua Vasquez	last edited: 3/19/2022
	SCALE: 1:1	SHEET 1 OF 17

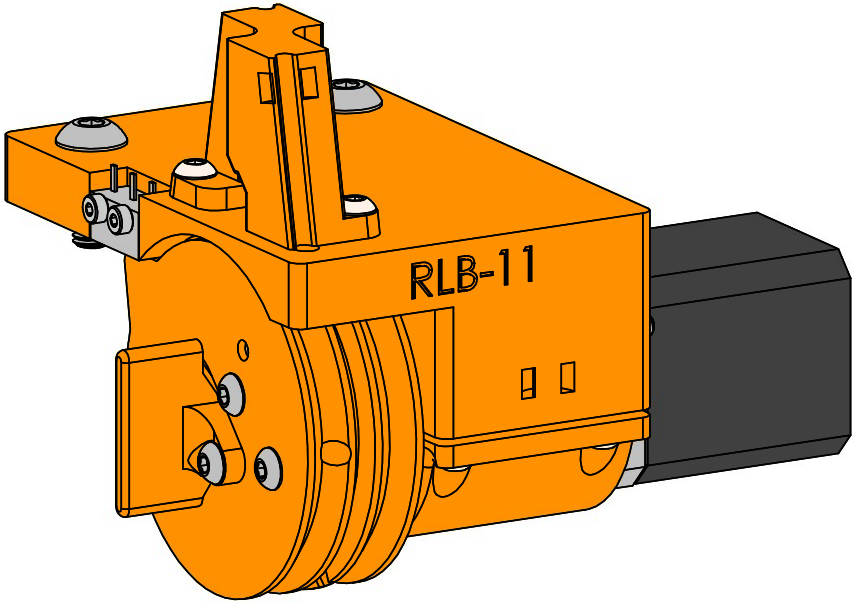

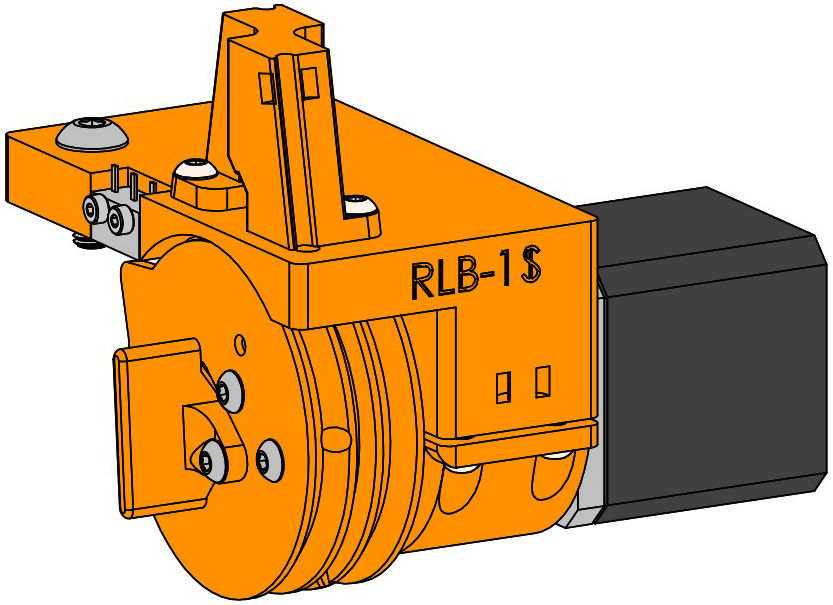

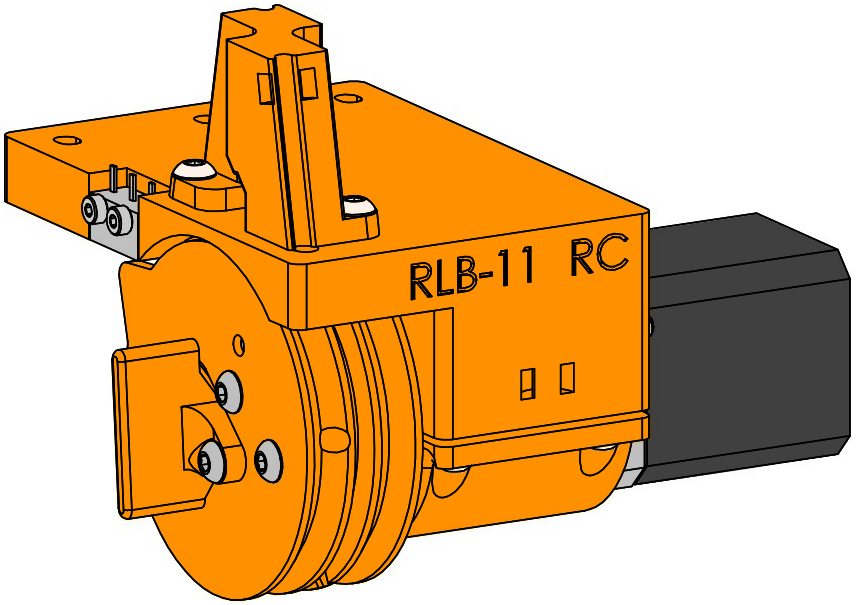

Note: There are three variants of this subsystem.

- RLB-10 for Jubilee
  - use an LDO motor
- RLB-10S for Jubilee
  - uses a StepperOnline motor
- RLB-09RC for the Railcore
  - uses an LDO motor

Each variant has a unique base plate. RLB-10S uses a unique base plate and motor clip. Make sure you've printed the parts that correspond to your motor.

Variants		
	Created by: Joshua Vasquez	last edited: 3/19/2022
	SCALE: 1:1	SHEET 2 OF 17

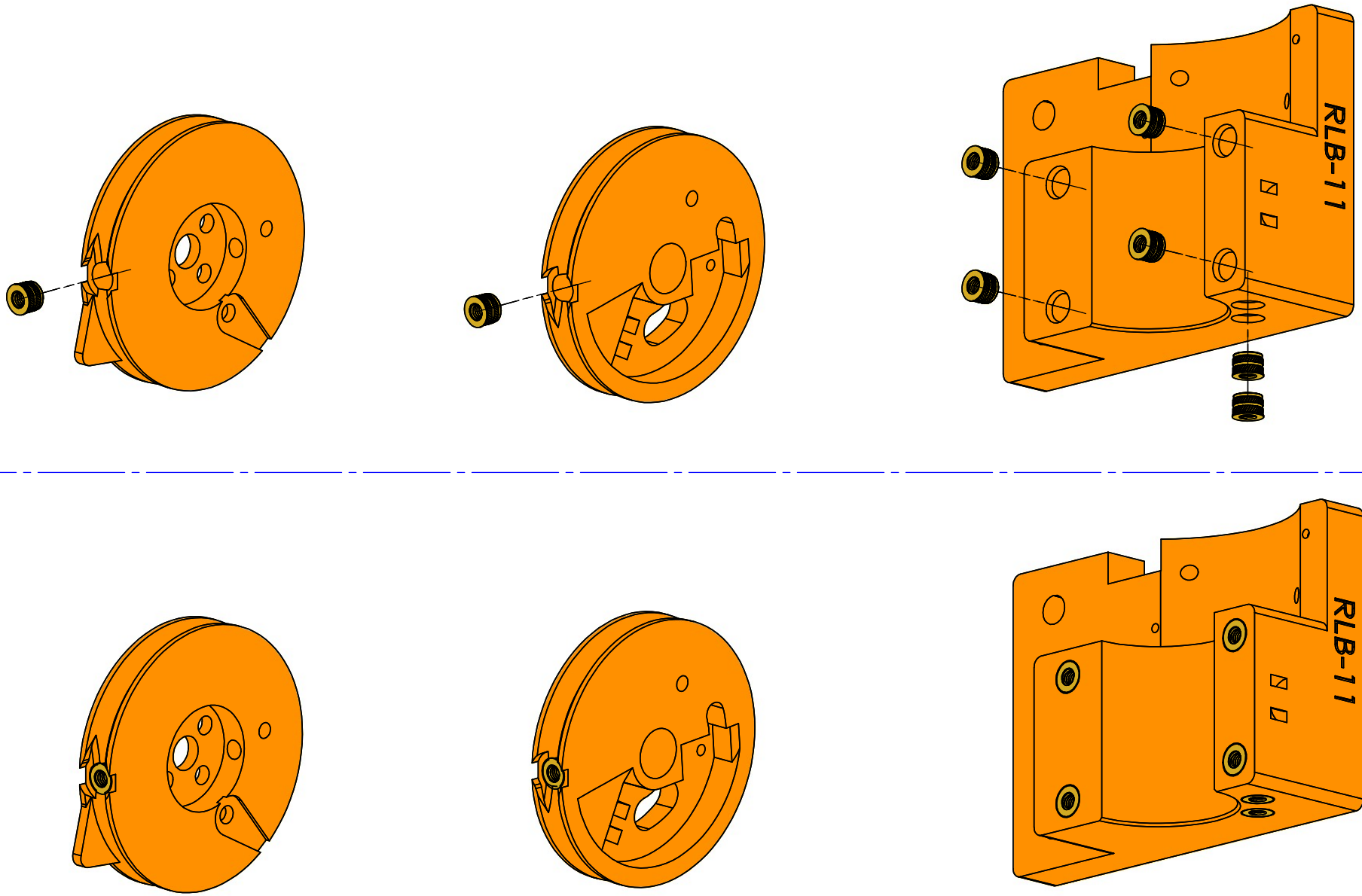

Parts with Inserts

CC BY

	Created by: Joshua Vasquez	last edited: 3/19/2022
	SCALE: 1:1	SHEET 3 OF 17

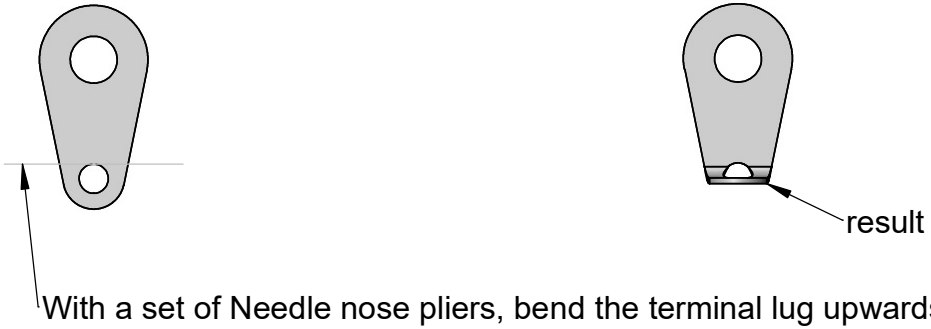

With a set of Needle nose pliers, bend the terminal lug upwards about 90 degrees along this line.
Do this for both terminal lugs.

ITEM NO.	DESCRIPTION	QTY.
1	M3 Solder Terminal Lug	2

Part Prep		
	Created by: Joshua Vasquez	last edited: 3/19/2022
	SCALE: 2:1	SHEET 4 OF 17

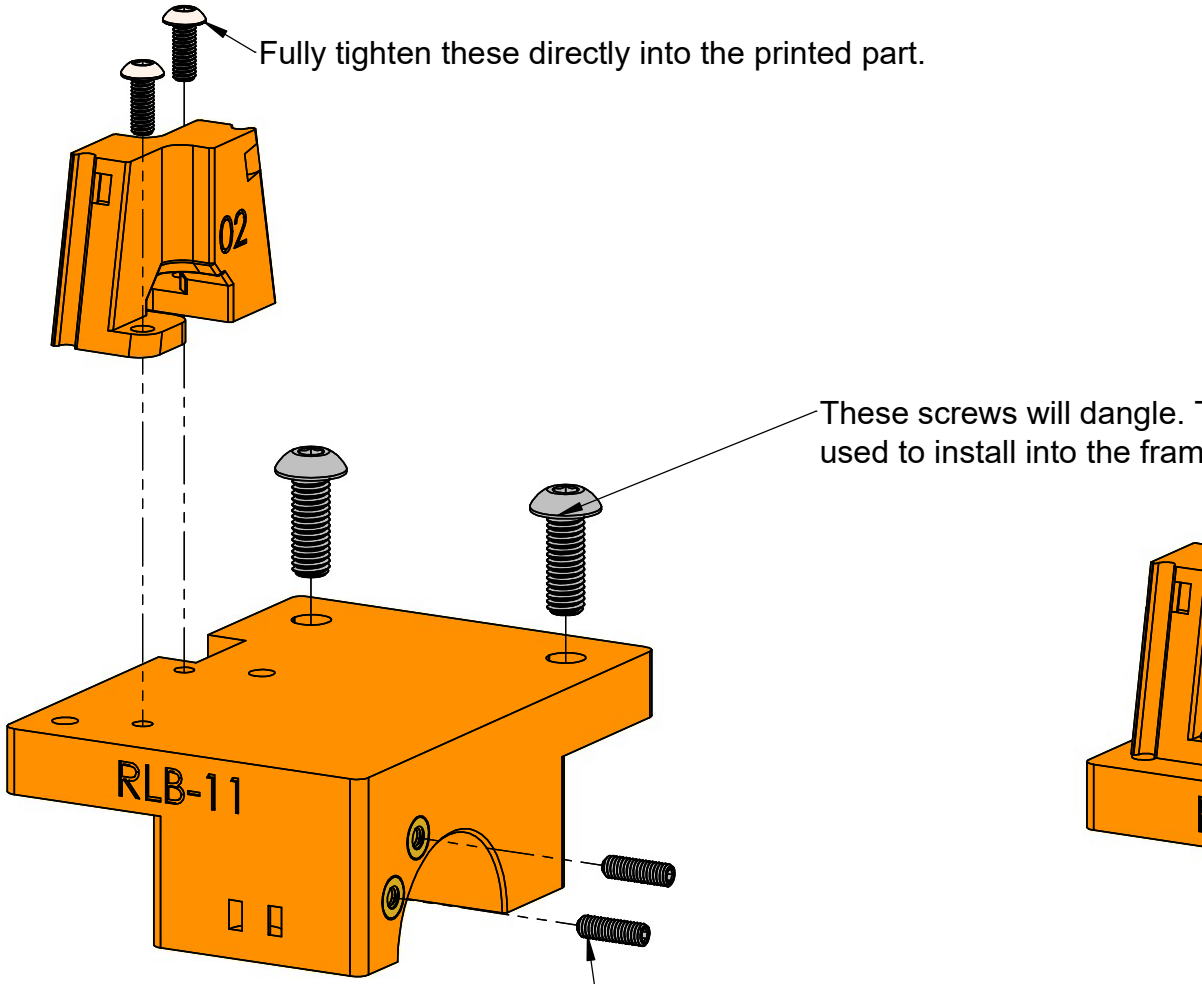

Exploded View

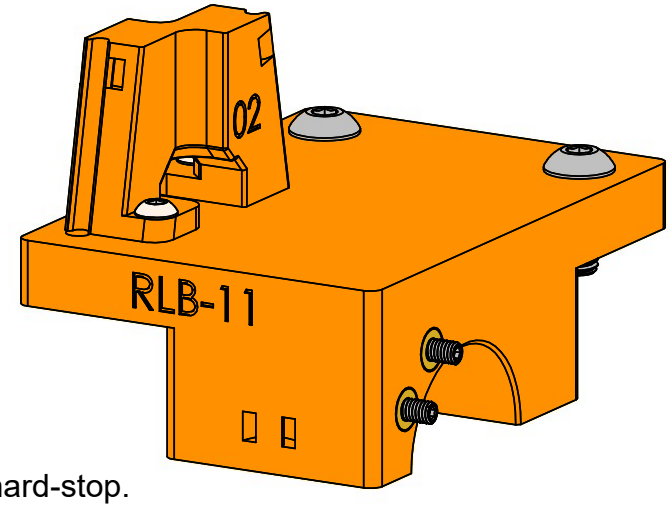

Assembled View

ITEM NO.	DESCRIPTION	QTY.
1	REL Base with Inserts	1
2	Spring Guide Anchor Block	1
3	M3 Buttonhead Screw, 8mm long	2
4	M5 Buttonhead Screw, 14mm long	2
5	M3 Set Screw, 10mm long	2

Base Plate Assembly

CC BY

Created by: Joshua Vasquez

last edited: 3/19/2022

SCALE: 1:1

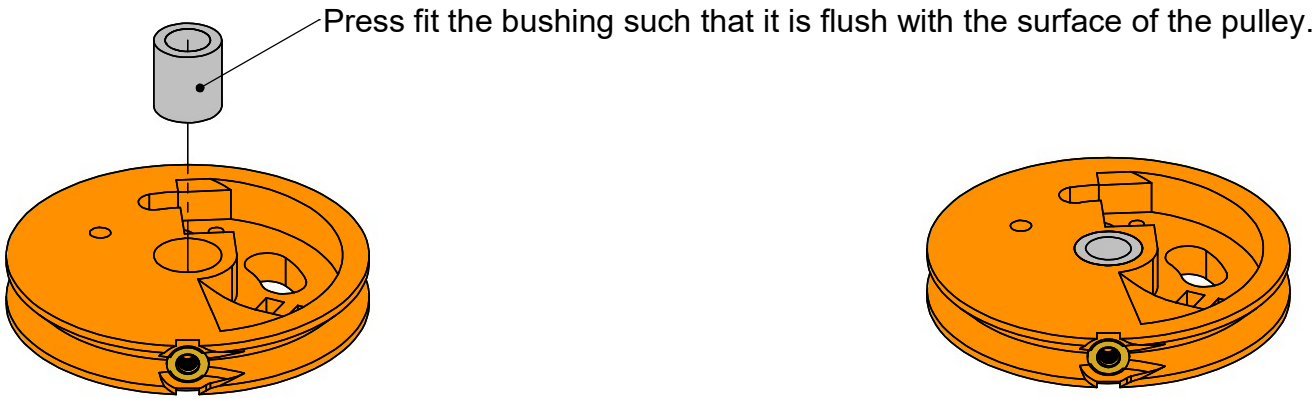

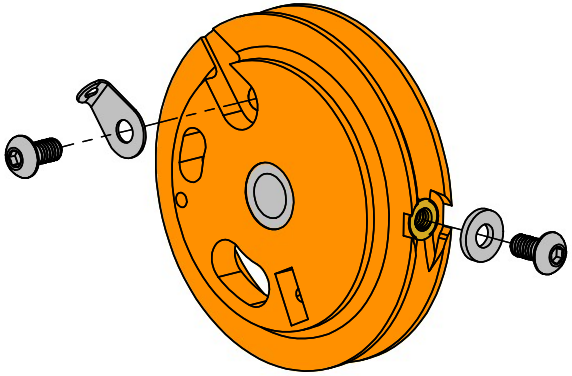

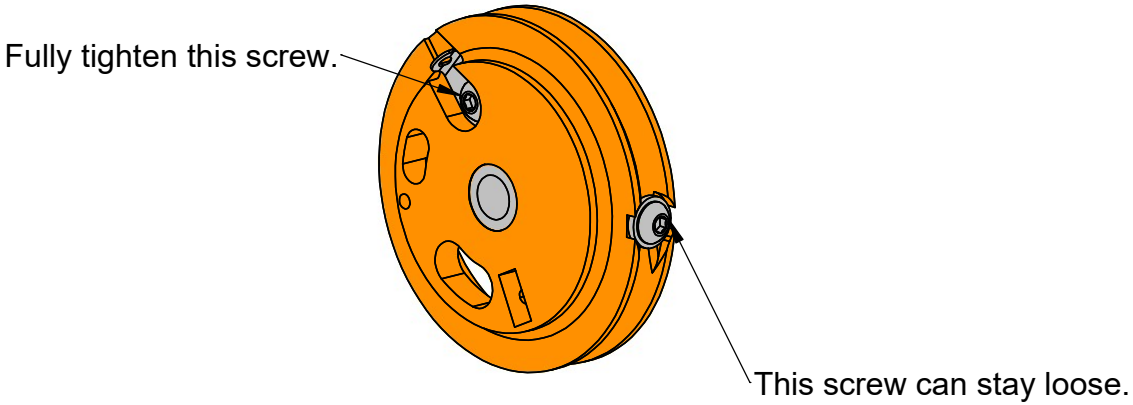

ITEM NO.	DESCRIPTION	QTY.
1	Floating Half Pulley with Insert	1
2	M3 Buttonhead Screw, 6mm long	2
3	Bent M3 Solder Terminal Lug (Bend A)	1
4	Sleeve Bearing, 6mm bore, 10mm long	1
5	M3 Washer	1

Floating Half Pulley Assembly

CC BY

Created by: Joshua Vasquez

last edited: 3/19/2022

SCALE: 1:1

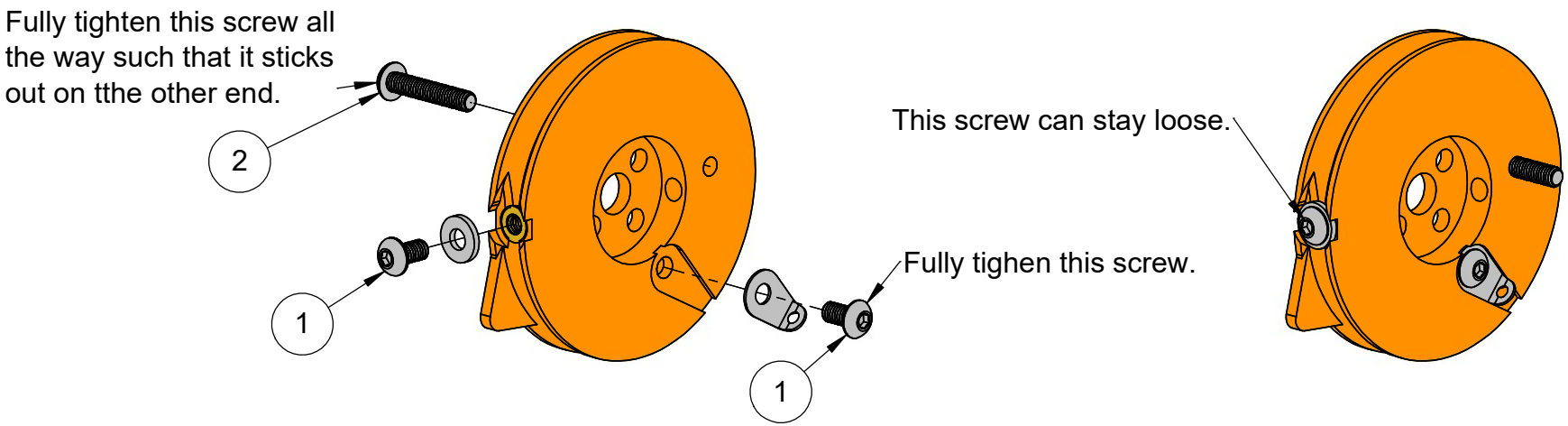

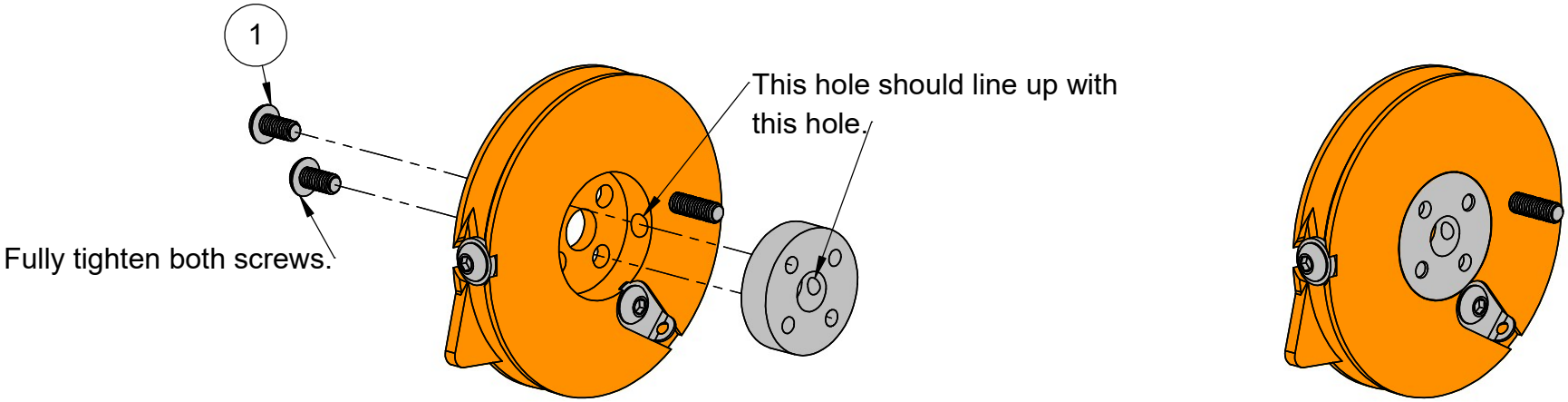

ITEM NO.	DESCRIPTION	QTY
1	M3 Buttonhead Screw, 6mm long	4
2	M3 Buttonhead Screw, 16mm long	1
3	M3 Washer	1
4	Bent M3 Solder Terminal Lug (Bend A)	1
5	Fixed Pulley with Insert	1
6	Hub, 6mm bore	1

Fixed Half Pulley Assembly		
	Created by: Joshua Vasquez	last edited: 3/19/2022
	SCALE: 1:1	SHEET 7 OF 17

Solder together the folowing limit switch harness. Be sure to insulate the solder connections with heat-shrink tubing.

Note wire lengths with respect to switch buttons.
Note: KK Connectors are included with Duet hardware.

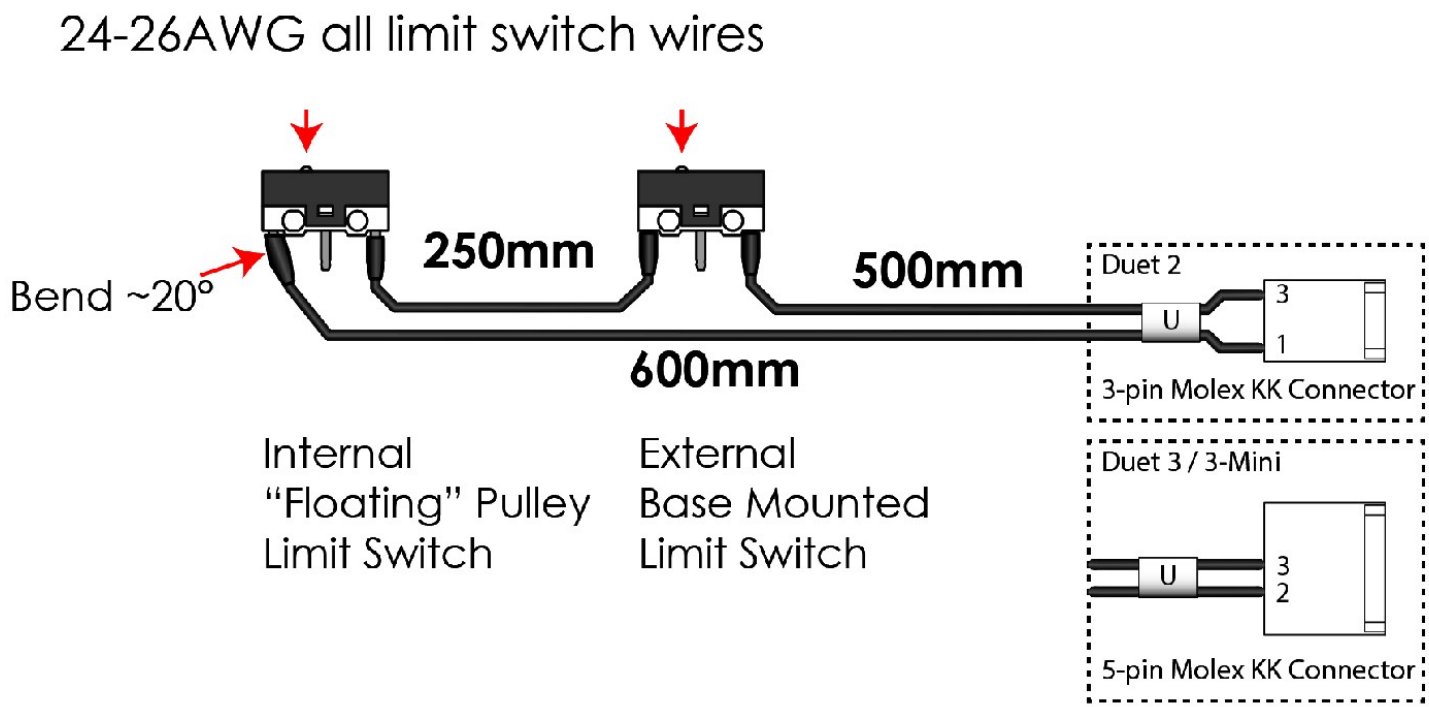

Wiring		
	Created by: Joshua Vasquez	last edited: 3/19/2022
	SCALE: 1:1	SHEET 8 OF 17

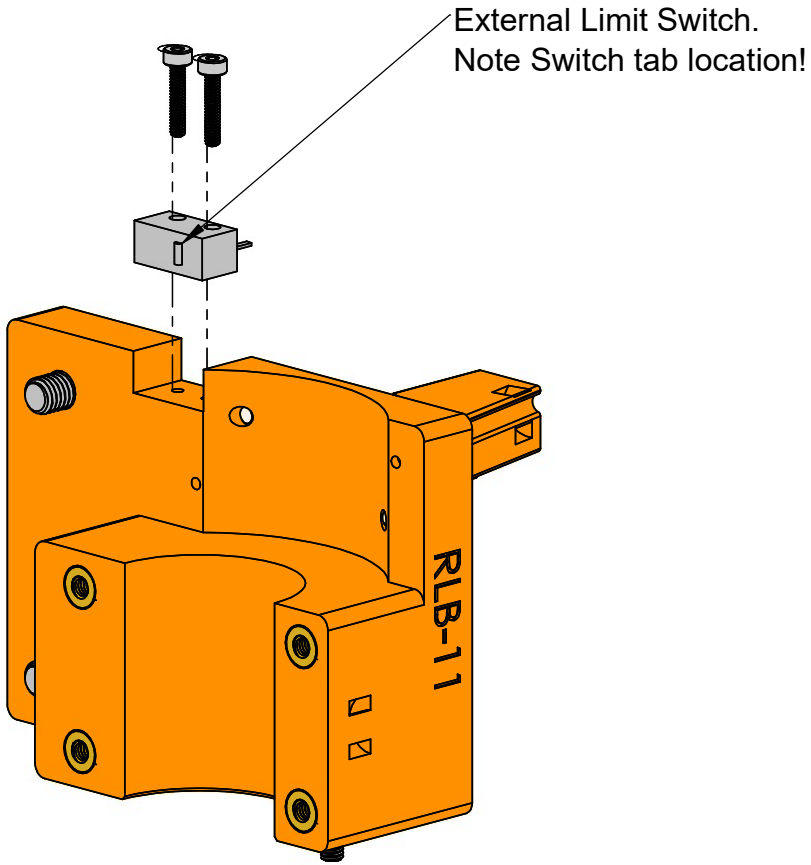

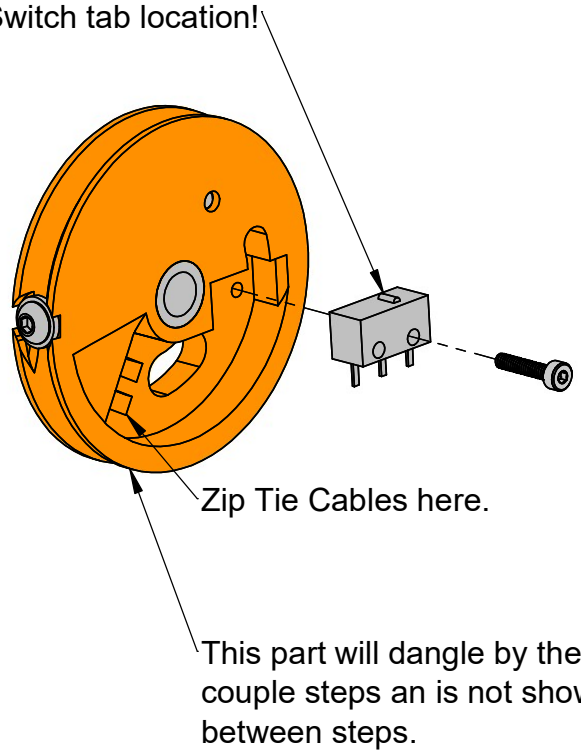

ITEM NO.	DESCRIPTION	QTY.
1	Floating Half Pulley with Insert	1
2	REL Base Plate with Inserts	1
3	M2 Screw, 10mm long	3
4	Mechanical Limit Switch	2

Limit Switch Installation

CC BY

Created by: Joshua Vasquez

last edited: 3/19/2022

SCALE: 1:1

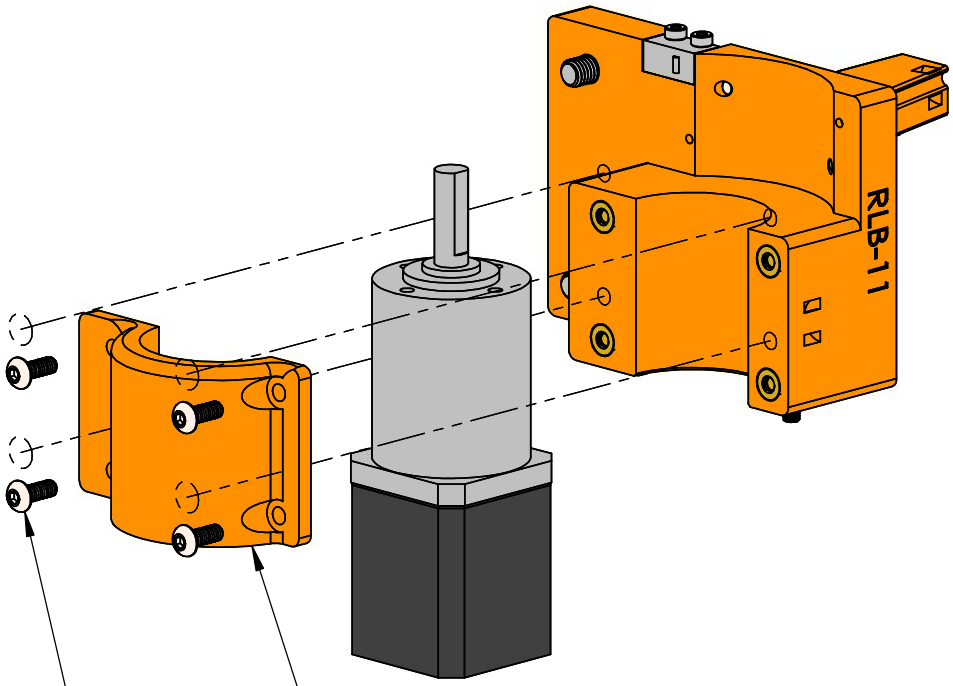

The motor clip only attaches one way.

Evenly tighten these screw such that:you cannot twist the motor relative to the plate by hand

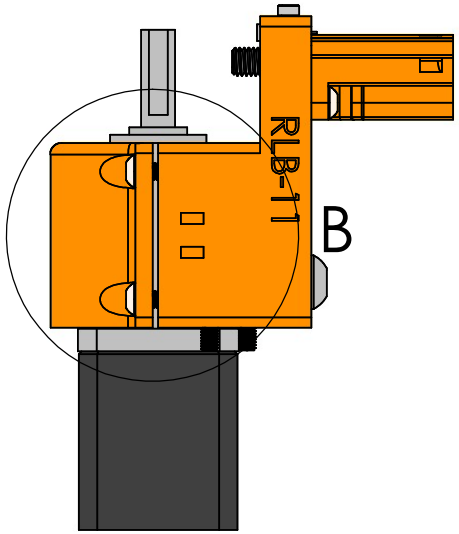

DETAIL B

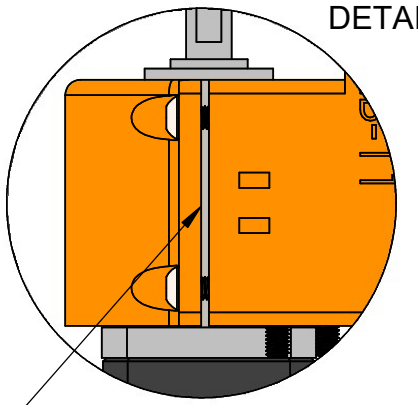

There will be a gap here on both sides. Ensure that it is even.

ITEM NO.	DESCRIPTION	
1	Planetary Stepper (varies)	1
3	Lock Actuator Motor Clip	1
4	M3 Buttonhead Screw, 8mm long	4

Motor Installation		
	Created by: Joshua Vasquez	last edited: 3/19/2022
	SCALE: 3:4	SHEET 10 OF 17

By hand, turn the motor shaft such that the flat part faces the orientation with the part number as shown here.

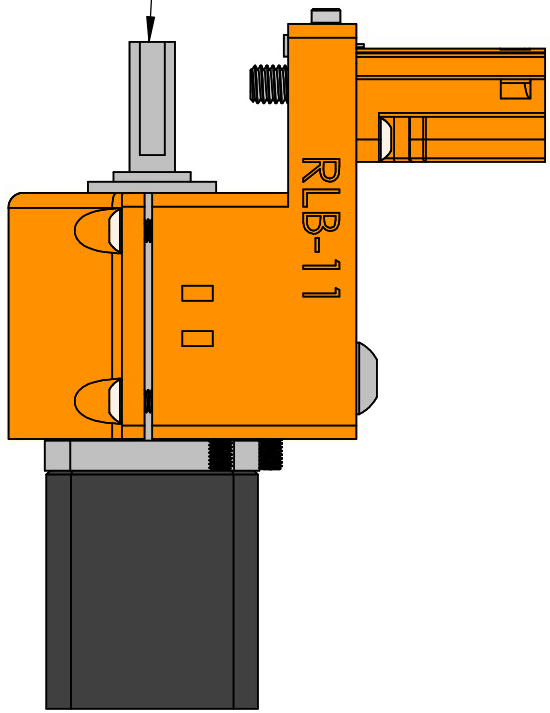

Shaft Alignment		
	Created by: Joshua Vasquez	last edited: 3/19/2022
	SCALE: 1:1	SHEET 11 OF 17

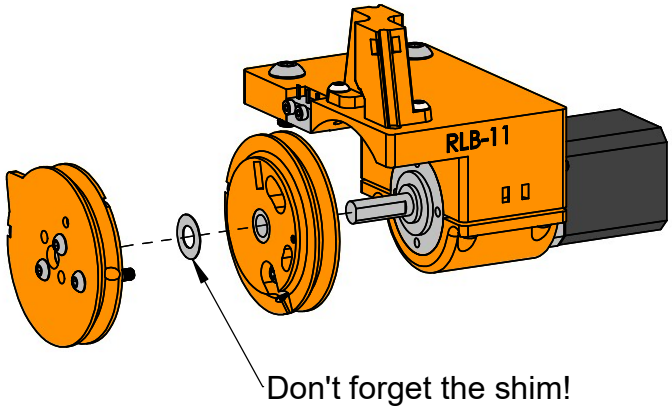

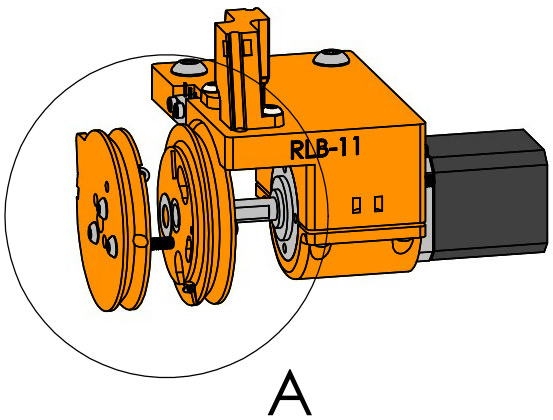

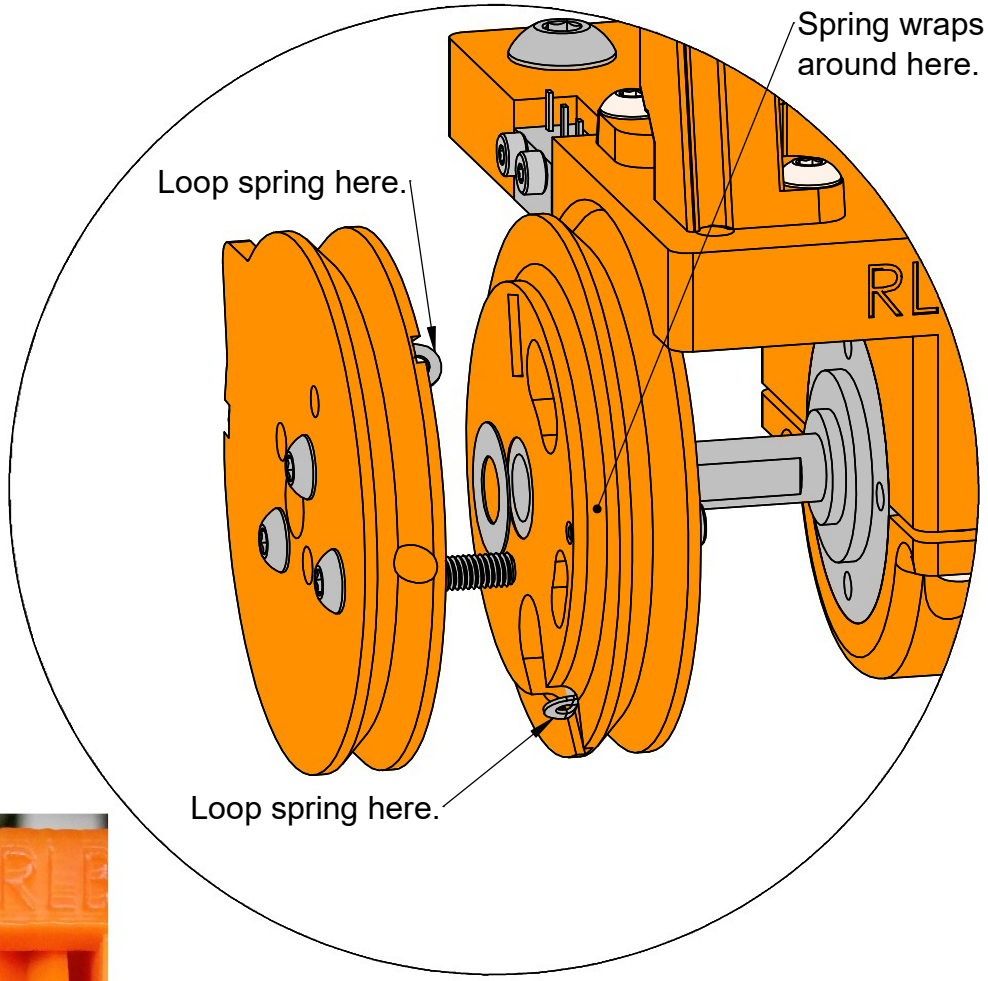

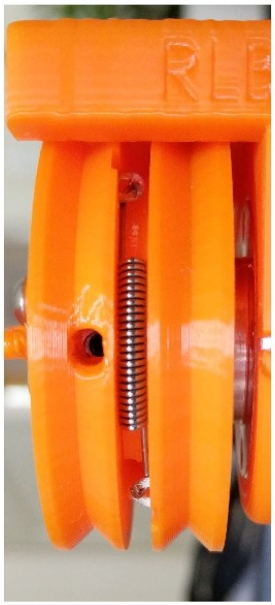

ITEM NO.	DESCRIPTION	QTY
1	Fixed Half Pulley Assembly	1
2	Floating Half Pulley Assembly	1
3	M6 Shim, 0.2mm thick	1
4	REL Extension Spring	1
9	M3 Set Screw, 5mm long	1

Pulley and Spring Assembly

CC BY

Created by: Joshua Vasquez

last edited: 3/19/2022

SCALE: 1:2

Push down on the fixed pulley while tightening the set screw.

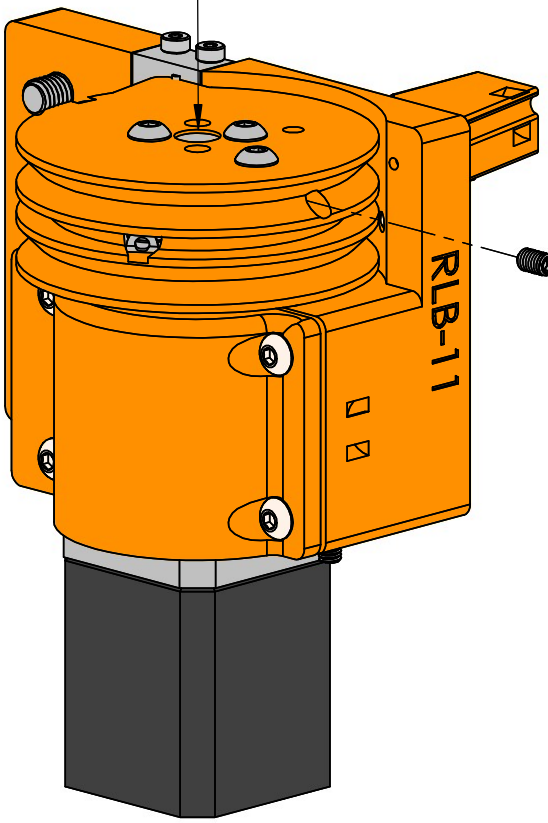

Apply threadlock to the threads of this set screw; then fully tighten it into the flat part of the shaft.

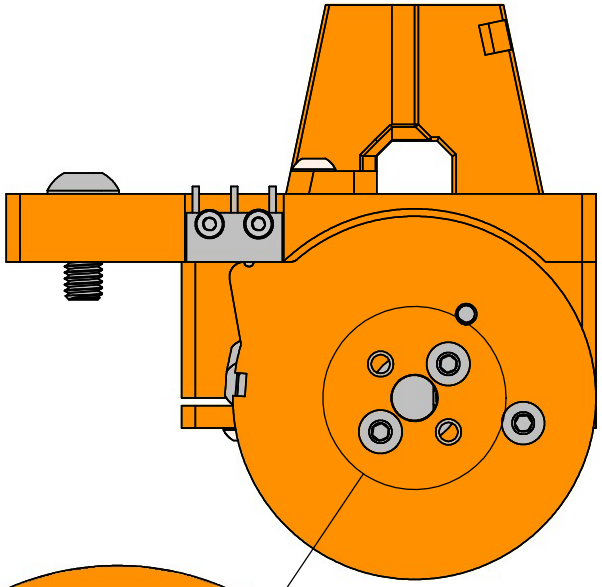

After tightening, ensure that the set screw is actually fixed onto the flat part of the shaft.

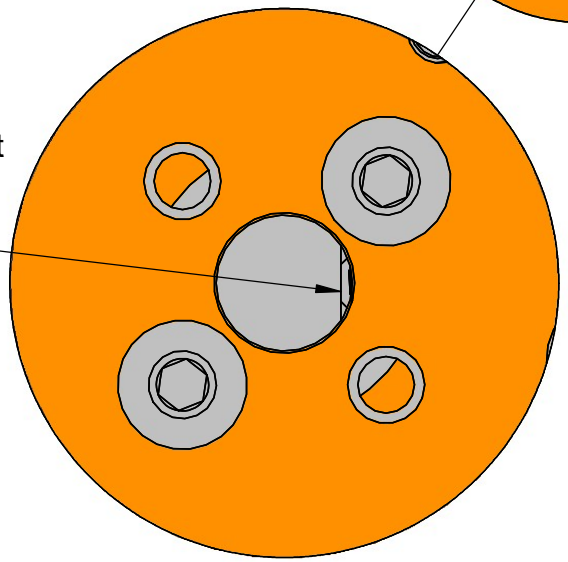

DETAIL D

ITEM NO.	DESCRIPTION	QTY.
2	M3 Set Screw, 5mm long	1

Fixed Pulley Securing

CC BY

Created by: Joshua Vasquez

last edited: 3/19/2022

SCALE: 1:1

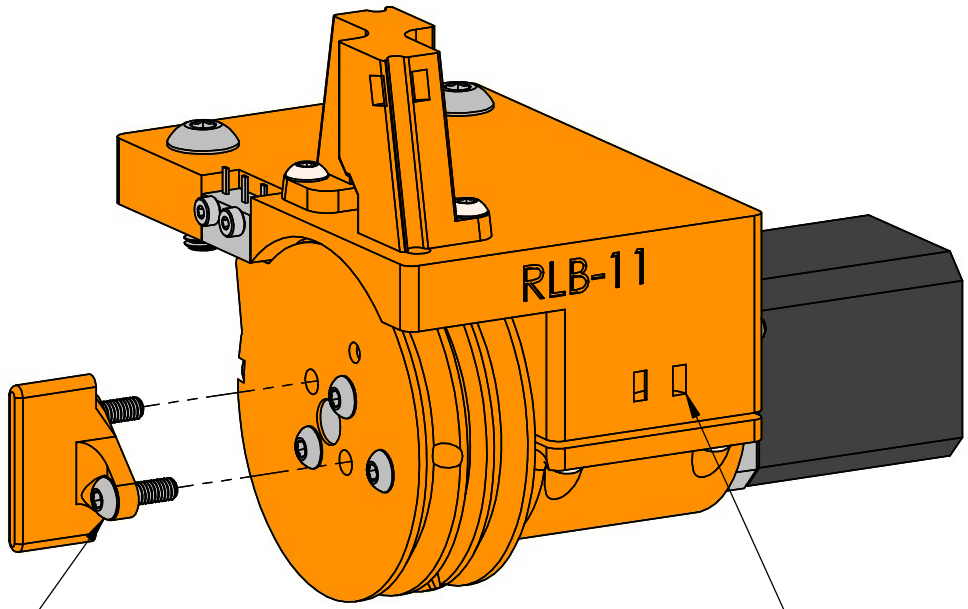

Fully tighten these screws.

Secure loose wires with a zip tire here.

ITEM NO.	DESCRIPTION	QTY.
1	REL Knob	1
2	M3 Buttonhead Screw, 10mm long	2

Knob and Cable Management

CC BY

Created by: Joshua Vasquez

last edited: 3/19/2022

SCALE: 1:1

Note: this is just a schematic representation. Join these parts loosely together on a flat table following the color coding.

Note: tape the spring guide to the table for ease of assembly.

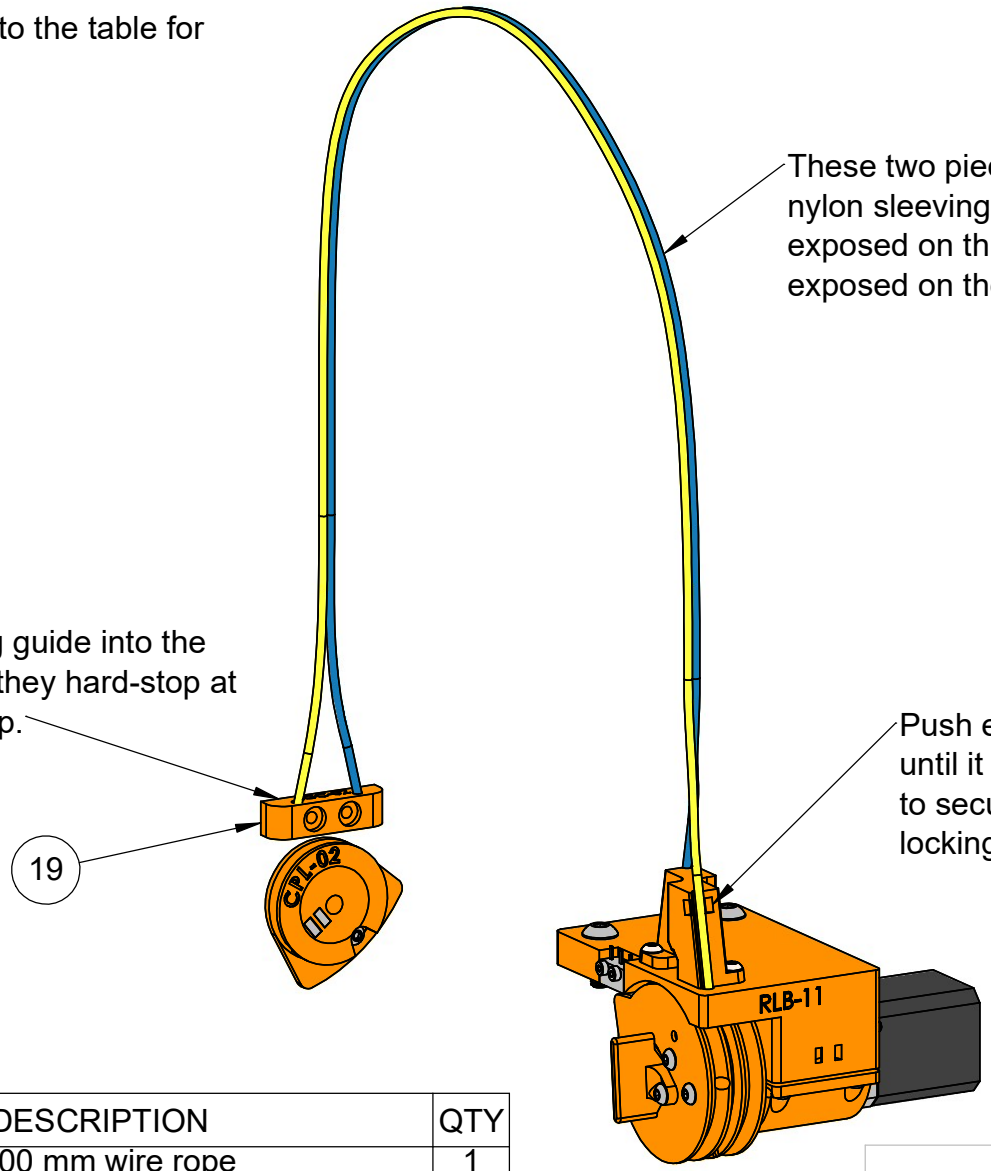

These two pieces can be sleeved together in a nylon sleeving, but leave at least 100mm exposed on th carriage side and 150mm exposed on the Lock side.

Push each spring guide into the printed part until they hard-stop at about 10mm deep.

19

Push each Spring Guide into the hole until it hard-stops. Then apply two zip ties to secure each spring guide at the locking side..

ITEM NO	DESCRIPTION	QTY
1	1600 mm wire rope	1
2	Carriage Pulley Assembly	1
3	Spring Guide, 600mm long	2
18	Spring Guide Capture (SGC)	1
5	Optonal: Braided Cable Sleeving 350mm long	1

Spring Guide Installation

CC BY

Created by: Joshua Vasquez

last edited: 3/19/2022

SCALE: 1:2

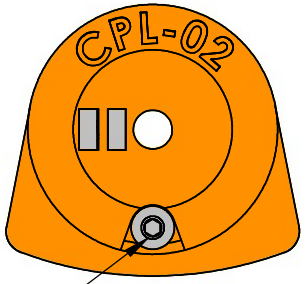

Loop the wire rope behind this screw at the halfway point and fully tighten the screw.

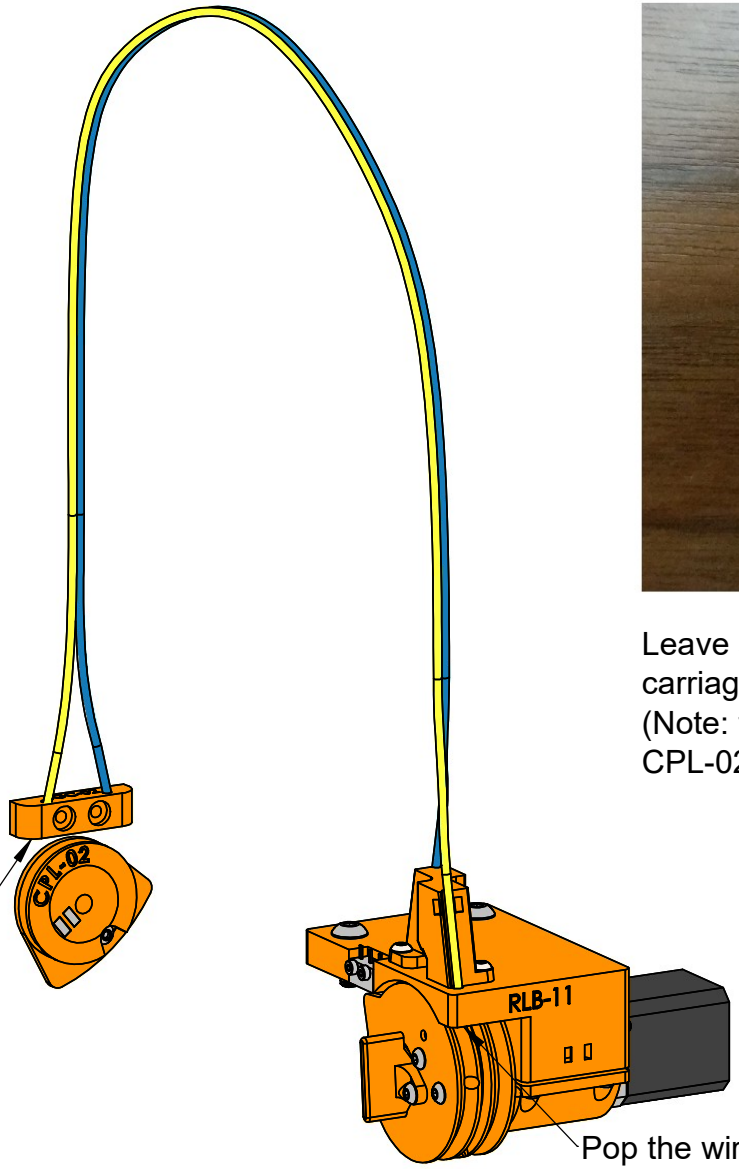

Tuck each loop of the wire rope into the closest hole.

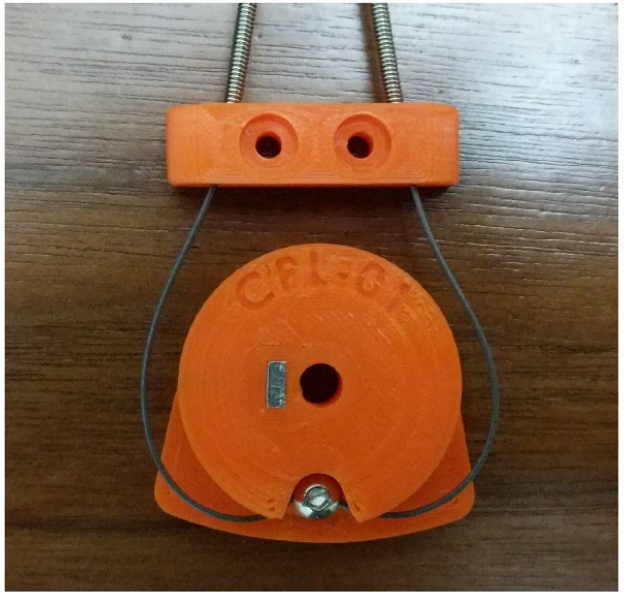

Leave some slack on both sides of the carriage for the next step.
(Note: the latest version of this part is CPL-02.)

Pop the wires out of each exit hole here.
See the next page for cinching detals.

ITEM NO	DESCRIPTION	QTY
1	1600 mm wire rope	1

Wire Rope Routing		
CC BY	Created by: Joshua Vasquez	last edited: 3/19/2022
	SCALE: 1:2	SHEET 16 OF 17

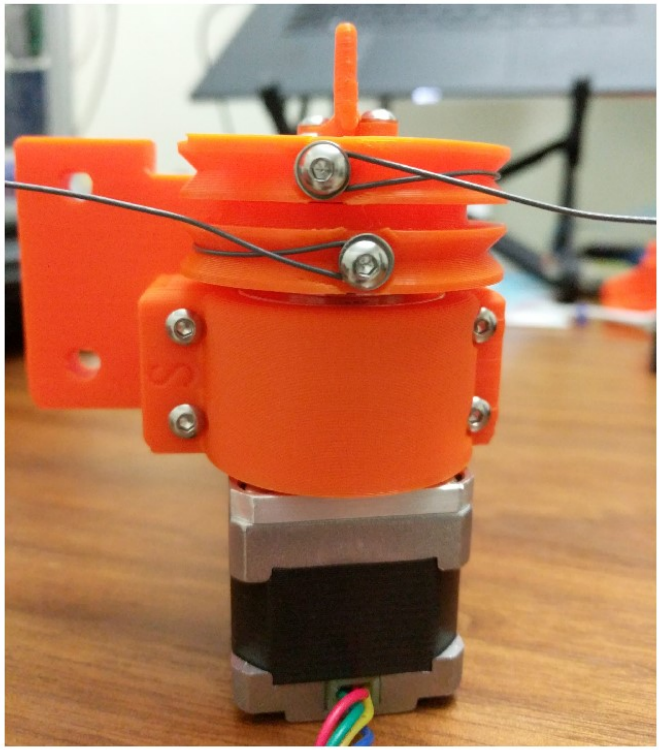

Cinch both wire rope ends down very lightly (upper left image), just enough such that the wire rope cannot pop out. The location of where they are cinched doesn't matter now as they will be properly located later.

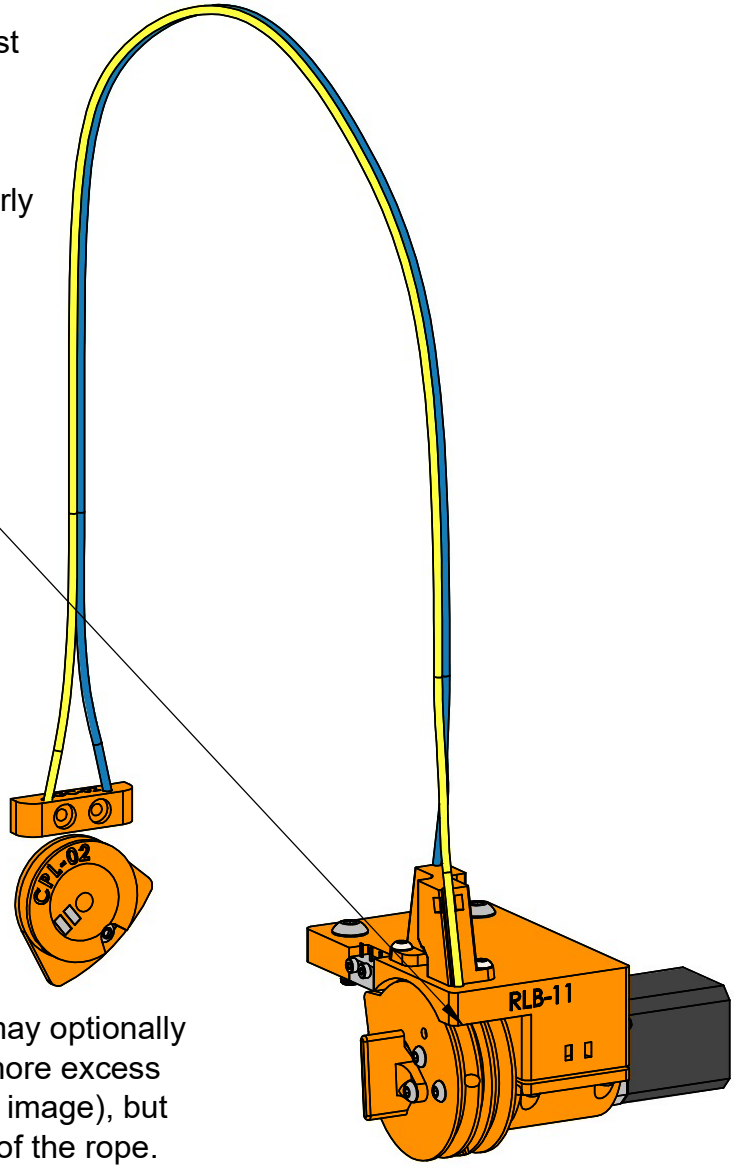

Once the wires are cinched, you may optionally take in the slack until there is no more excess wire rope on the carriage side (left image), but do not put tension into either side of the rope. This setup makes it easier to install on the machine later.

(Note: The latest version of this part is CPL-02.)

Wire Rope Termination		
CC BY	Created by: Joshua Vasquez	last edited: 3/19/2022
	SCALE: 1:2	SHEET 17 OF 17